MÔJ ALTÁNOK

www.mojaltanok.sk

2023

GRILLHOUSES

NILS

Art 115 002

Double Glazed
ISO-Verglasung
Lämpölasit
Isolerglas

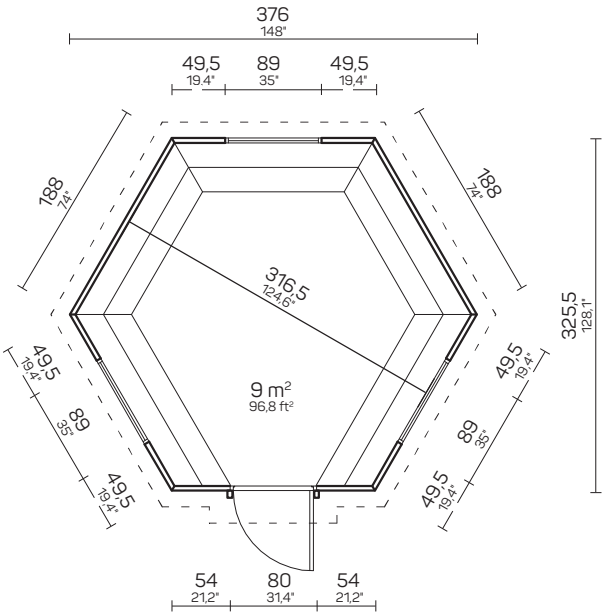

325,5×376 cm	316,5×367 cm	44 mm	135 cm	310 cm	9 m²	28 cm	18 m³	45°
128,1×148"	124,6×144,4"	1 3/4"	53,1"	122"	96,8 ft²	11"	635,6 ft³	45°

18+28 mm	800×1500 mm	890×500 mm	890×500 mm	120×240×260 cm	1200 kg
0,7+1,1"	31,4×59"	35×19,6"	35×19,6"	47,2×94,4×102,3"	2645 lb
Slatted floor elements					

ROSCO

Art 115 003

Double Glazed
ISO-Verglasung
Lämpölasit
Isolerglas

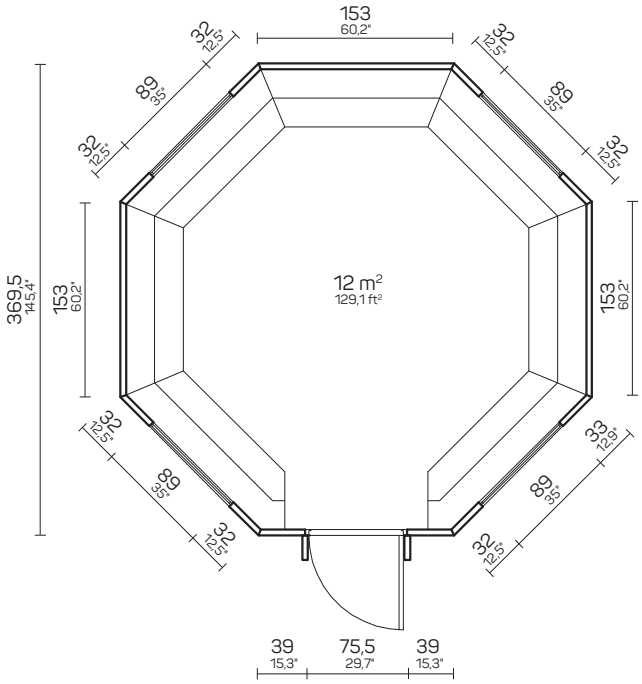

369,5×399 cm	360,5×390 cm	44 mm	135 cm	275 cm	12 m²	28 cm	24 m³	38°
145,4×157"	141,9×153,5"	1 3/4"	53,1"	108,2"	96,8 ft²	11"	847,5 ft³	38°

18+28 mm	800×1500 mm	890×500 mm	890×500 mm	140×240×270 cm	1400 kg
0,7+1,1"	31,4×59"	35×19,6"	35×19,6"	55,1×94,4×106,2"	3086 lb
Slatted floor elements					

RUBEN

Art 115 004

Double Glazed
ISO-Verglasung
Lämpölasit
Isolerglas

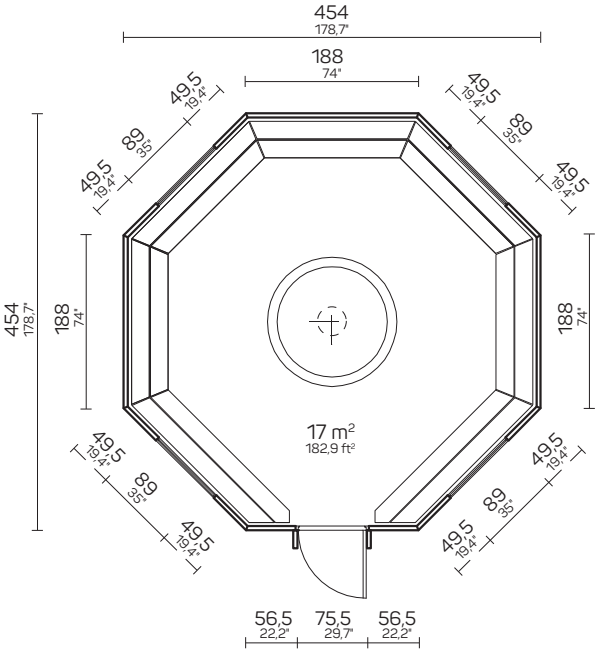

454×490,5 cm	445×481,5 cm	44 mm	135 cm	310 cm	17 m²	28 cm	35 m³	38°
178,7×193,1"	175,1×189,5"	1 3/4"	53,1"	122"	182,9 ft²	11"	1236 ft³	38°
18+28 mm	800×1500 mm	890×500 mm	890×500 mm				120×320×250 cm	1500 kg
0,7+1,1"	31,4×59"	35×19,6"	35×19,6"				47,2×125,9×98,4"	3306 lb

Slatted floor elements

FILIP

Art 115 005

Double Glazed
ISO-Verglasung
Lämpölasit
Isolerglas

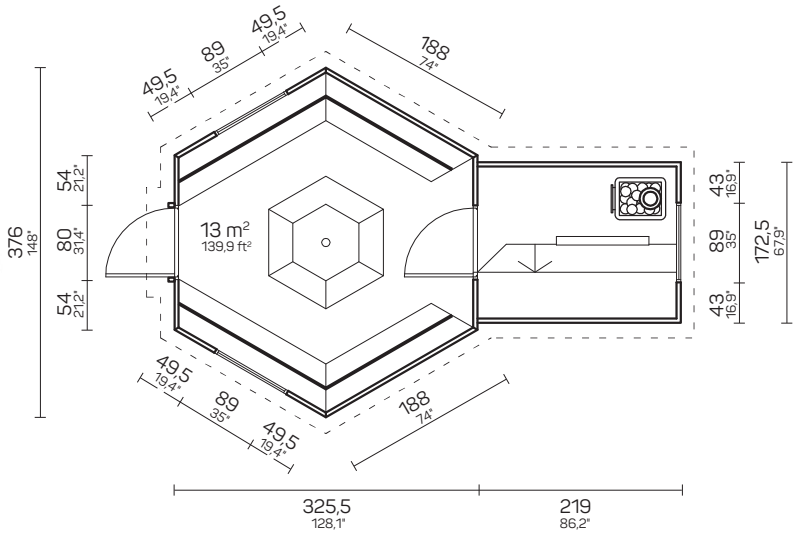

376×544,5 cm	367×535,5 cm	44 mm	135 cm	310 cm	9+4 m²	30 cm	24 m³	45°
148×214,3"	144,4×210,8"	1 3/4"	53,1"	122"	96,8+43 ft²	11,8"	847,5 ft³	45°

18+18 mm	800×1500 mm	890×500 mm	890×500 mm	120×240×250 cm 2x	1000 kg
0,7+0,7"	31,4×59"	3"×19,6"	35×19,6"	47,2×94,4×98,4" 2x	2204 lb
Full floor					

NORA

Art 116 001

Double Glazed
ISO-Verglasung
Lämpölasit
Isolerglas

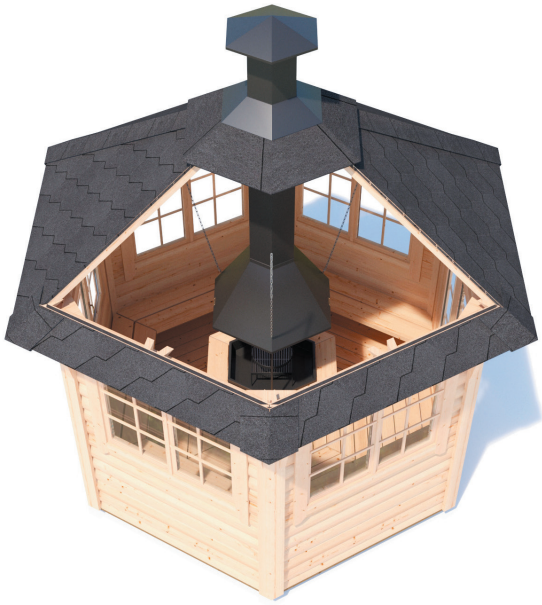

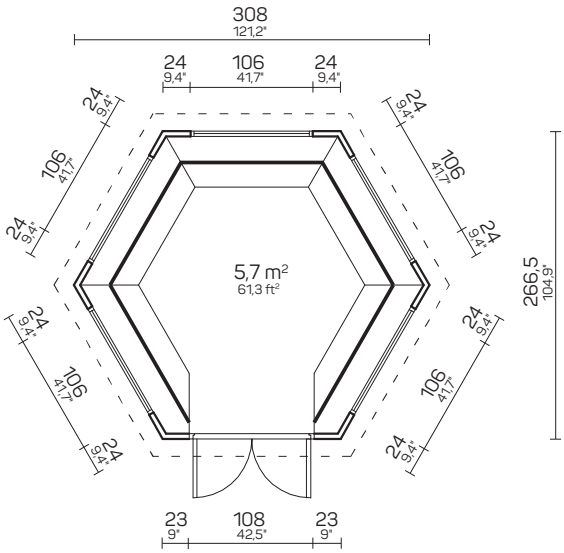

266,5×308 cm	257,5×299 cm	44 mm	200 cm	310 cm	6 m²	35 cm	15 m³	38°
104,9×121,2"	101,3×117,7"	1 3/4"	78,7"	122"	64,5 ft²	13,7"	529,7 ft³	38°
18+28 mm	1× 1080×1700 mm	1× 890×1060 mm	4× 890×1060 mm				120×240×240 cm	1000 kg
0,7+1,1"	42,5×66,9"	35×41,7"	35×41,7"				47,2×94,4×94,4"	2204 lb

Slatted floor elements

ALBA

Art 116 002

Double Glazed
ISO-Verglasung
Lämpölasit
Isolerglas

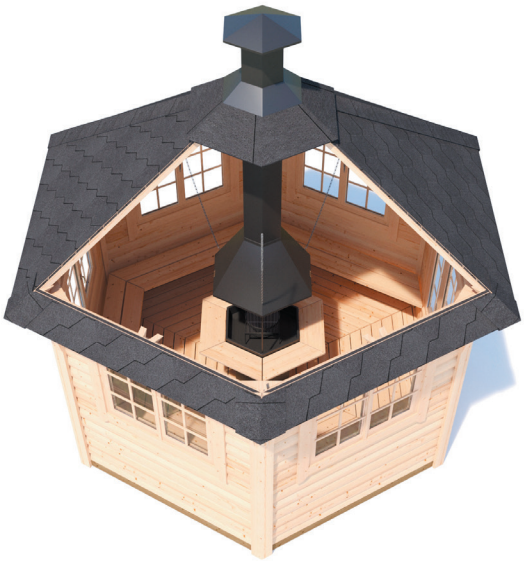

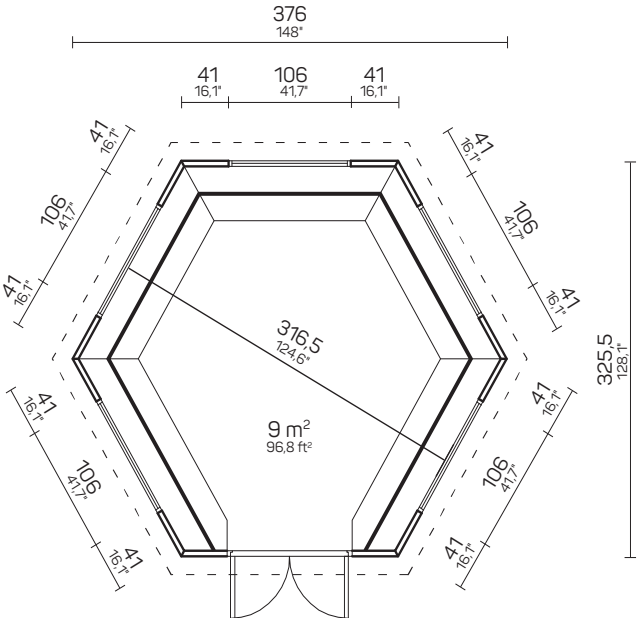

325,5×376 cm	316,5×367 cm	44 mm	200 cm	320 cm	9 m²	35 cm	27 m³	38°
128,1×148"	124,6×144,4"	1 3/4"	78,7"	125,9"	96,8 ft²	13,7"	953,4 ft³	38°
18+28 mm	1× 1080×1700 mm	1× 890×1060 mm	4× 890×1060 mm				L×W×H kg 120×240×240 cm	1200 kg
0,7+1,1"	42,5×66,9"	35×41,7"	35×41,7"				47,2×94,4×94,4"	2645 lb

Slatted floor elements

HILDA

Art 116 003

Double Glazed
ISO-Verglasung
Lämpölasit
Isolerglas

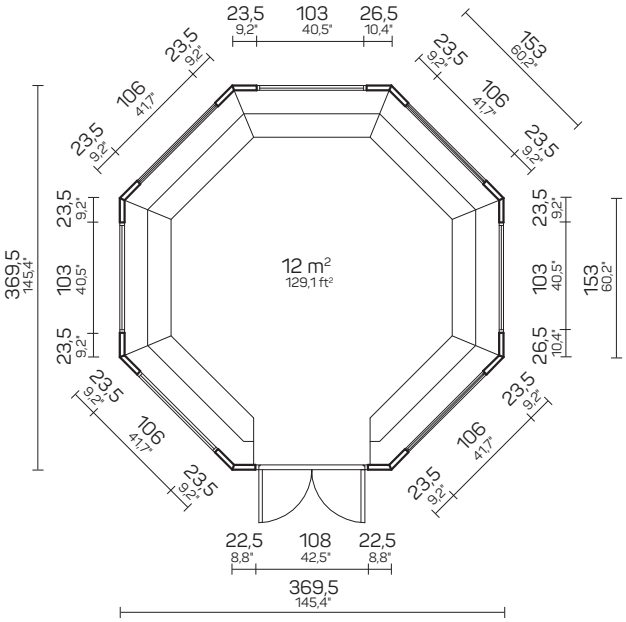

369,5×399 cm	360,5×390 cm	44 mm	200 cm	340 cm	12 m²	35 cm	30 m³	38°
145,4×157"	141,9×153,5"	1 3/4"	78,7"	133,8"	129,1 ft²	13,7"	1059,4 ft³	38°

18+28 mm	1080×1700 mm	890×1060 mm	890×1060 mm	140×240×270 cm	1400 kg
0,7+1,1"	42,5×66,9"	35×41,7"	35×41,7"	55,1×94,4×106,2"	3086 lb
Slatted floor elements					

DANA

Art 116 004

Double Glazed
ISO-Verglasung
Lämpölasit
Isolerglas

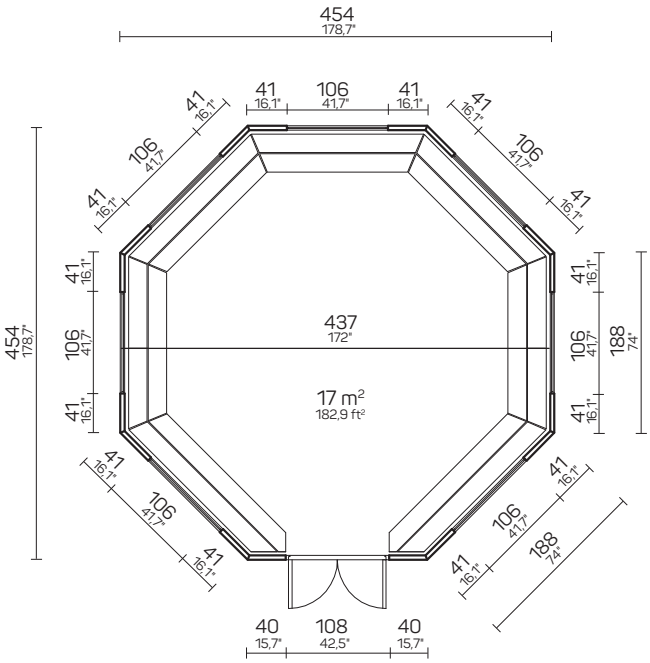

454×491,5 cm	445×482,5 cm	44 mm	200 cm	400 cm	17 m²	35 cm	43 m³	38°
178,7×193,5"	175,1×189,9"	1 3/4"	78,7"	157,4"	182,9 ft²	13,7"	1518,5 ft³	38°

18+28 mm	1080×1700 mm	890×1060 mm	890×1060 mm	120×320×250 cm	1500 kg
0,7+1,1"	42,5×66,9"	35×41,7"	35×41,7"	47,2×125,9×98,4"	3306 lb
Slatted floor elements					

MAGNUS

Art 115 006

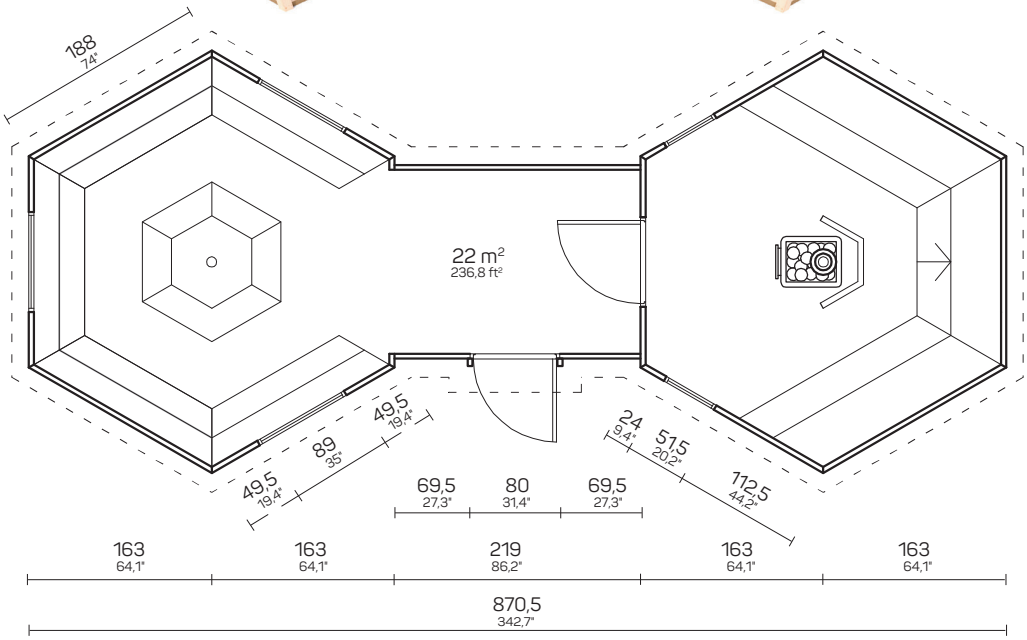

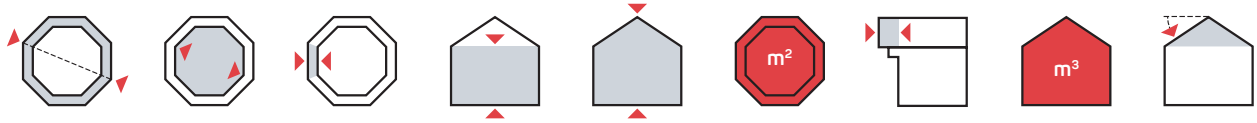

870,5×376 cm	861,5×367 cm	44 mm	135 cm	310 cm	22 m²	30 cm	43 m³	45°
342,"×148"	339,1×144,4"	1 3/4"	53,1"	122"	236,8 ft²	11,8"	1518,5 ft³	45°

18+28+18 mm	800×1500 mm	890×500 mm	890×500 mm	120×240×260 cm 2x	1200 kg
0,7+1,1+0,7"	31,4×59"	35×19,6"	35×19,6"	47,2×94,4×102,3" 2x	2204 lb

28 mm slatted floor elements,
18 mm full floor in sauna

MELISSA

Art 115 007

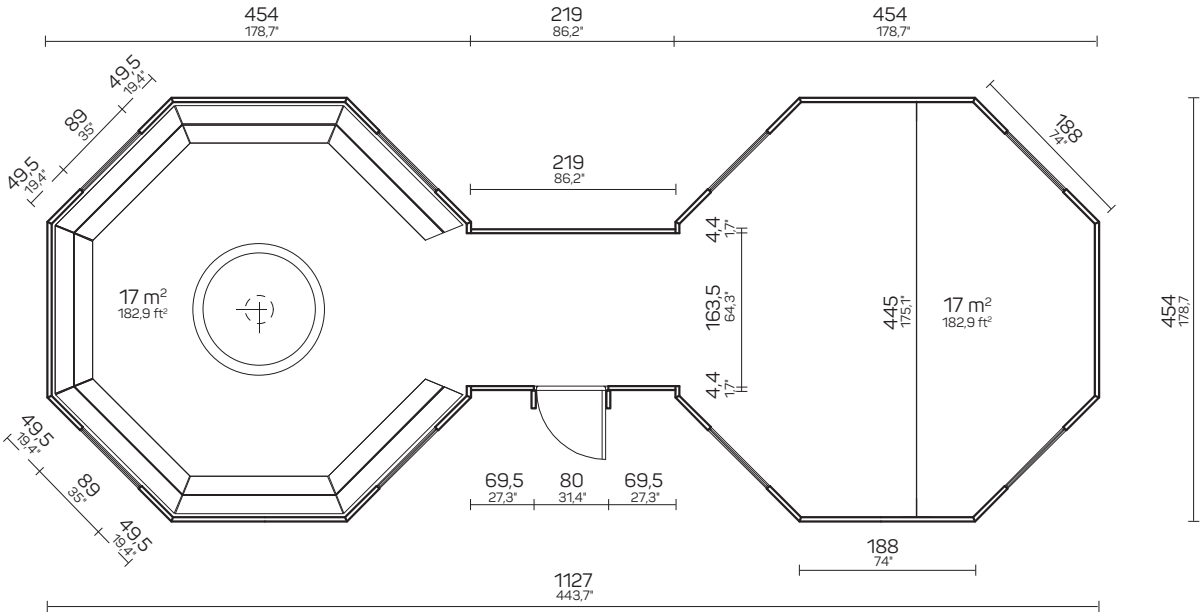

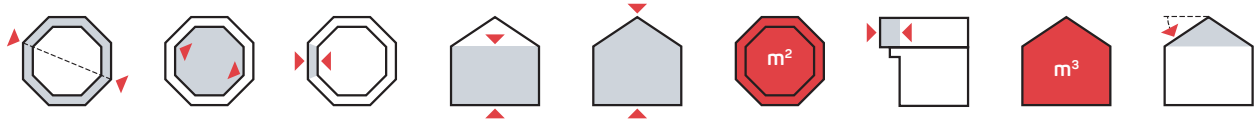

1127×454 cm	1118×445 cm	44 mm	150 cm	310 cm	38 m²	30 cm	84 m³	38°
443,7×178,7"	440,1×175,1"	1 3/4"	59"	122"	409 ft²	11,8"	2966,4 ft³	38°

18+28 mm	800×1700 mm	890×630 mm	890×630 mm	120×320×260 cm 2x	1300 kg
0,7+1,1"	31,4×66,9"	35×24,8"	35×24,8"	47,2×125,9×102,3" 2x	2866 lb

Slatted floor elements, full floor in sauna

AXEL

Art 117 001

Double Glazed
ISO-Verglasung
Lämpölasit
Isolerglas

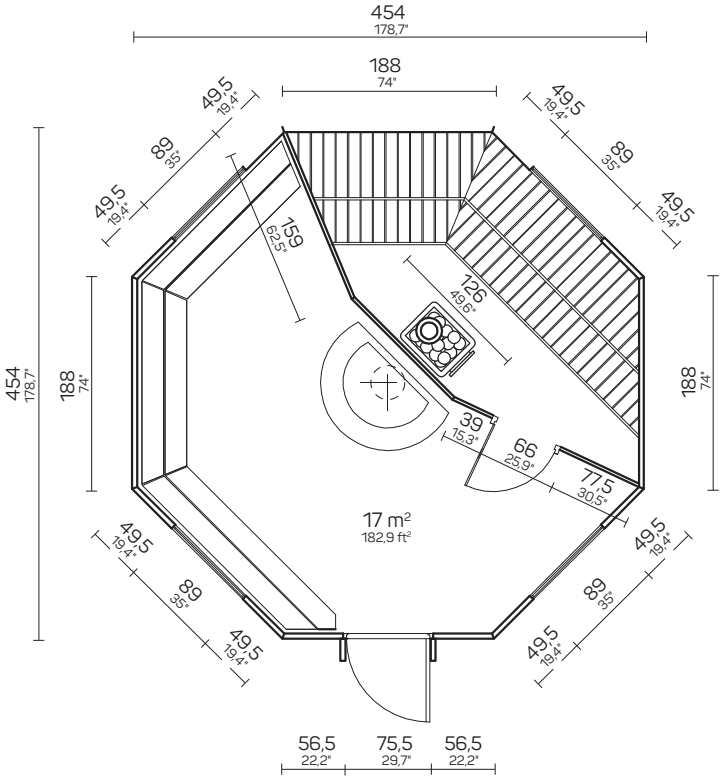

454×491,5 cm	445×482,5 cm	44 mm	150 cm	330 cm	17 m²	30 cm	39 m³	38°
178,7×193,5"	175,1×189,9"	1 3/4"	59"	129,9"	182,9 ft²	11,8"	1377,2 ft³	38°

18+28 mm	800×1700 mm	890×630 mm	890×630 mm	120×320×250 cm 2x	1200 kg
0,7+1,1"	31,4×66,9"	35×24,8"	35×24,8"	47,2×125,9×98,4" 2x	2645 lb
Full floor					

IRIS

Art 116 005

Double Glazed
ISO-Verglasung
Lämpölasit
Isolerglas

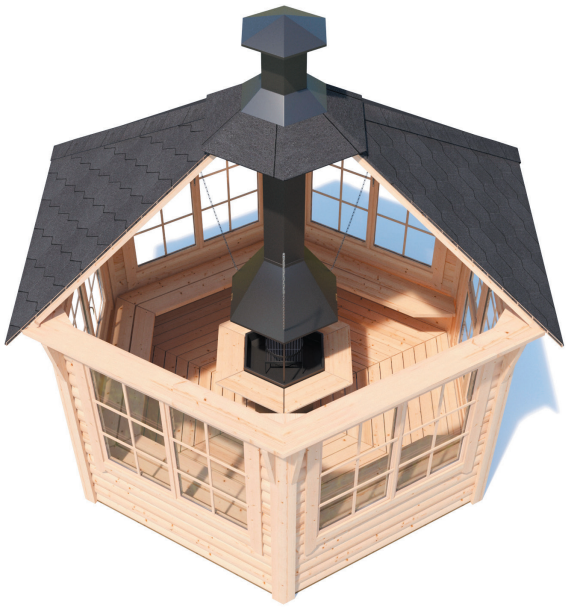

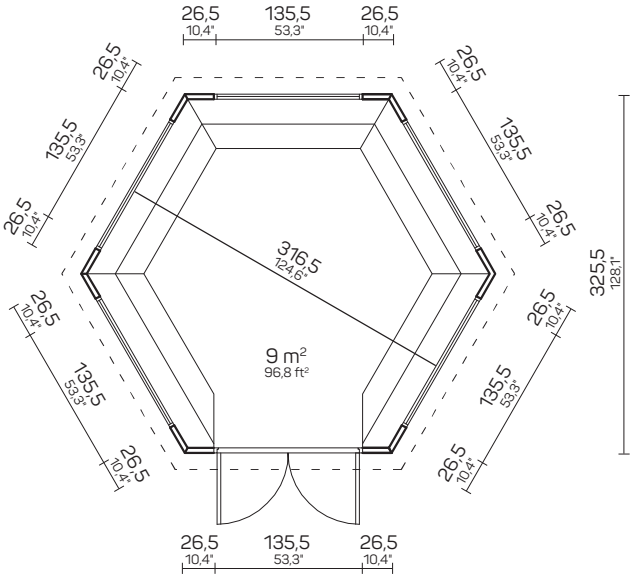

325,5×376 cm	316,5×367 cm	44 mm	200 cm	320 cm	9 m²	35 cm	27 m³	38°
128,"×148"	124,6×144,4"	1 3/4"	78,7"	125,9"	96,8 ft²	13,7"	953,4 ft³	38°
18+28 mm	1340×1700 mm	1170×1340 mm	1170×1340 mm				120×240×260 cm	1200 kg
0,7+1,1"	52,7×66,9"	46×52,7"	46×52,7"				47,2×94,4×102,3"	2645 lb

Slatted floor elements

HANNA

Art 117 002

Double Glazed
ISO-Verglasung
Lämpölasit
Isolerglas

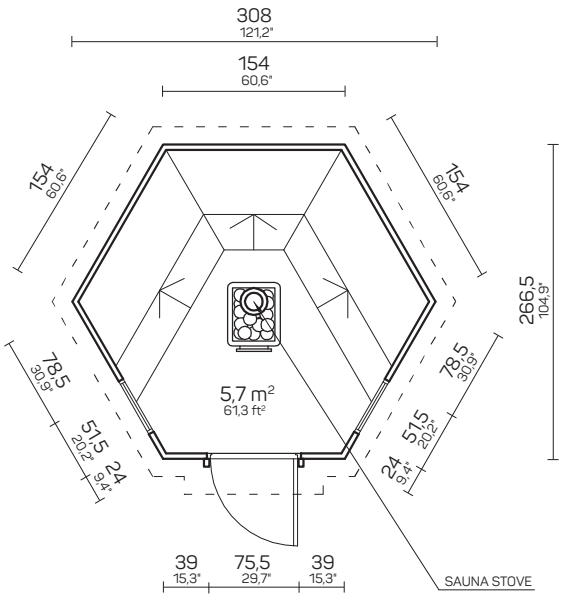

266,5×308 cm	257,5×299 cm	44 mm	150 cm	265 cm	6 m²	28 cm	13 m³	45°
104,9×212,2"	101,3×117,7"	1 3/4"	59"	104,3"	64,5 ft²	11"	459 ft³	45°

18+18 mm	800×1500 mm	570×500 mm	140×240×260 cm	1300 kg
0,7+0,7"	31,4×59"	22,4×19,6"	55,1×94,4×102,3"	2866 lb
Full floor				

KRIS

Art 117 003

Double Glazed
ISO-Verglasung
Lämpölasit
Isolerglas

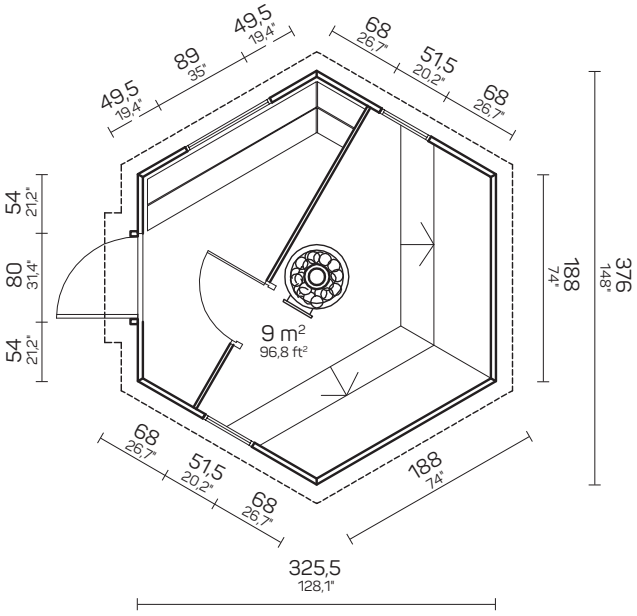

325,5×376 cm	316,5×367 cm	44 mm	150 cm	310 cm	9 m²	30 cm	20 m³	45°
128,1×148"	124,6×144,4"	1 3/4"	59"	122"	96,8 ft²	11,8"	706,2 ft³	45°

18+18 mm	800×1500 mm	890×500 mm	570×500 mm	150×240×260 cm	1500 kg
0,7+0,7"	31,4×59"	35×19,6"	22,4×19,6"	59×94,4×102,3"	3306 lb
Full floor					

ELSA

Art 115 008

Double Glazed
ISO-Verglasung
Lämpölasit
Isolerglas

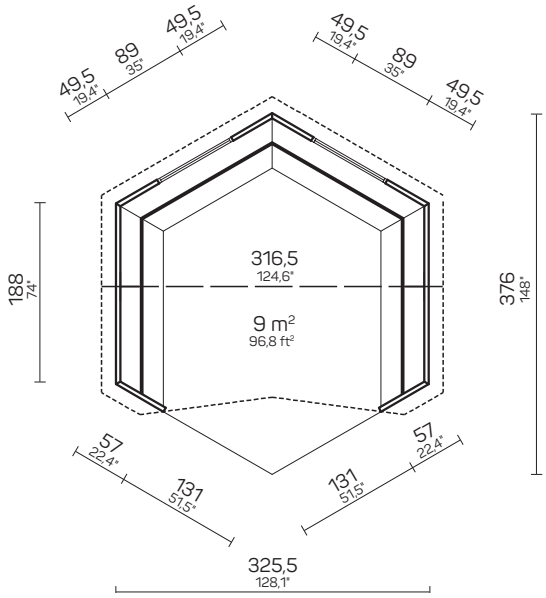

325,5×376 cm	316,5×367 cm	44 mm	135 cm	310 cm	9 m²	28 cm	18 m³	45°
128,1×148"	124,6×144,4"	1 3/4"	53,1"	122"	96,8 ft²	11"	635,6ft³	45°
18+28 mm	890×500 mm	570×500 mm					110×240×260 cm	900 kg
0,7+1,1"	35×19,6"	22,4×19,6"					43,3×94,4×102,3"	1984 lb

Slatted floor elements